深圳市劲宇电子有限公司

Shenzhen Jinyu Electronics Co., Ltd

承　　认　　书
Specifications For Approval

Customer Model		Part No.	
Jinyu Model	轻触开关	Part No.	JQA4545C-B0151-01BG-1-105

Approved by Jinyu		
Approved by	Checked by	Prepared by
温道静	王燚盛	黄萌

Approved by Customer	
Research & Development	Quality Assurance

Remark:
1:This product specification is considered as the technical agreement between the receiving customer and Jinyu, Any information on the general product catalogue which is in conflict with or differentform from the corresponding information of this document is considered as invalid.
2:If customer issue purchase orders without confirmation by signature of this specification after receipt,such confirmation will be considered as granted upon receipt of the first purchase order.

客　户　签　署 (盖章)
Sing for customer approved

劲 宇 签 署 (盖章)
Sing for Jinyu approved

确认日期：　　年　月　日　　**送承认日期：　　年　月　日**

变 更 履 历 表

REV	变更内容描述 DECSRIPTION	修订日期 DATE	生效日期 DATE	变更人 NAME
A	新版发行	2026.06.10	2026.06.19	黄萌

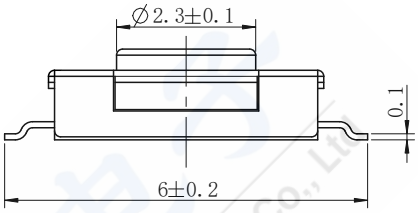

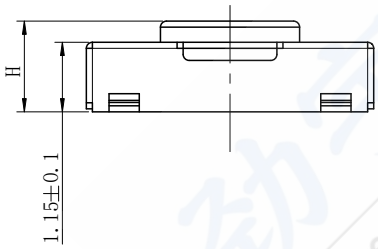

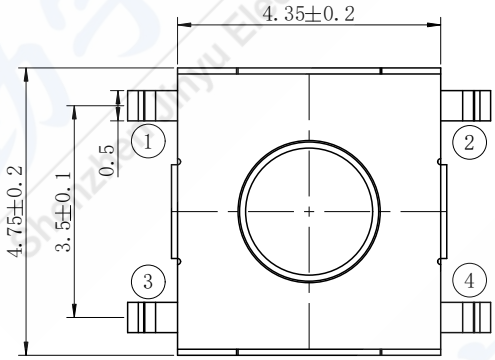

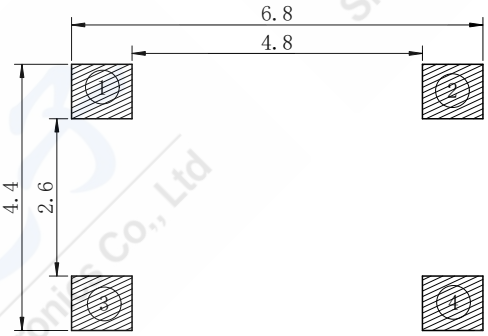

焊接图

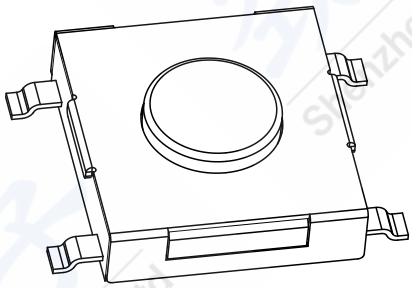

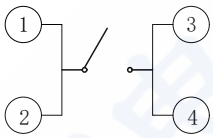

原理图

Genral Tolerance:±0.2mm　　H=1.5±0.1mm　　Package：4000PCS/盘

5	手柄	PPA	1	BLACK
4	上盖	SUS	1	ECRU
3	接触片	SUS	1	Ag-P
2	底座	PPA	1	BLACK
1	端子	PHOSPHOR COPPER	1	Ag-P
No.	Name	Material	Qty.	Finishing

一、一般特性（General Characteristics）

1.1 工作温度范围（Operating Temperature Range）

-25℃～85℃(在标准大气压、标准湿度条件下)

-25℃～85℃(Normal humidity, normal air pressure)

1.2 贮藏温度范围（Storage Temperature Range）

-16℃～60℃(在标准大气压、标准湿度条件下)

-16℃～60℃(Normal humidity, normal air pressure)

1.3 测试条件（Test Conditions）

1.3.1. 在没有其它特定的条件下，应该在以下的条件下进行测试和测量：

Unless otherwise specified, tests and measurement shall be made in the following standard conditions：

(1) 常温（Normal temperature）……5℃～35℃；

(2) 标准湿度（Normal humidity）……相对湿度（relative humidity）25%～85%；

(3) 标准大气压（Normal air pressure）……86Kpa～106Kpa；

1.3.2. 在制造过程中，测试和测量应该在以下的条件下进行：

If any doubt arise from the judgment, tests shall be conducted at the following conditions：

(1) 温度（Temperature）……20℃±2℃；

(2) 相对湿度（Relative humidity）……65%±5%；

(3) 环境气压（Air pressure）……86Kpa～106Kpa；

1.4 存储方法（Storage method）

1.4.1. 使用前确保包装完整无破损，无浸湿。（Ensure that the product without package breaking or wetting before use. ）

1.4.2. 存储条件（Storage conditions）：

(1) 储存温度（Storage temperature）……-5 ~ 35 C；

(2) 储存湿度（Storage humidity）……25% ~80%；

1.4.3. 未开封状态：6 个月内使用完毕（从发货日开始计算）； 超过 6 个月后再使用的，使用前请先验证：端脚无氧化、无发黑、塑料件无吸湿起泡，确保焊接的适宜性。

Unopened status: Use up the product as soon as possible before 6 months. (calculated from shipment date).Over 6 months, please make sure below before use it: terminal without oxidation or blackening, plastic parts without moisture absorption or bubble, ensure solderability.

1.4.4. 已开封状态：1 个月内使用完毕。（Opened status: use up within 1 month.）

1.4.5. 储存注意事项：避开高湿高温和有腐蚀性气体的环境及阳光直射。

Storage precautions: Please avoid the following environment: with high humidity, high temperature , corrosive gases and direct sunlight.

1.4.6.请勿超重叠放。（Do not stack too many switches.）

二、外观，结构及尺寸（Appearance, Structure and Dimensions）

2.1 外观：产品外观良好，无锈蚀、裂纹和镀层缺陷。

Appearance: The switch shall have good finishing, and no rust, crack or plating defects.

2.2 结构及尺寸：参见产品图纸。

Structure & Dimensions: Refer to individual product drawing.

2.3 标识：参见产品图纸。

Markings: Refer to individual product drawing.

三、额定负荷（Ratings）	DC 12V 50mA（Max）；DC 1V 10μA（Min）

四、电气特性 Electrical Characteristics

No.	项目 Item	标准 Criteria	实验方法 Test Method
4.1	接触电阻 Contact Resistance	100mΩ Max.	在 1KHz 微小电流(100mA)以下测试。 Measured at 1KHz small current(100mA or less).
4.2	绝缘电阻 Insulation Resistance	100MΩ Min.	在相互绝缘的所有端子之间及各接线端子与外露的非载流金属零件之间加载 250V 直流电，持续时间 60±5S。 250VDC voltage is applied between each pair of terminals and between the terminal and the metal frame for 60±5S.
4.3	耐压强度 Dielectric withstand in voltage	无击穿现象发生。 No dielectric breakdown shall occur.	在相互绝缘的所有接线端子之间 及各接线端子与外壳或非载流金属零件之间加载 250V 交流电，持续时间 60±5S。 2500VAC is applied between non-connected terminals and between terminals and the metal frame for 60 ±5s.
4.4	触点抖动 Bounce	ON-10ms Max. OFF-10ms Max.	按照正常使用时的力度轻按手柄中心（每秒 3～4 次），在导通和断开过程中测试开关抖动。 Lightly striking the center of the stem at a rate encountered in normal use (3 to 4 times per second), and bounce shall be tested at “ON” and “OFF”. 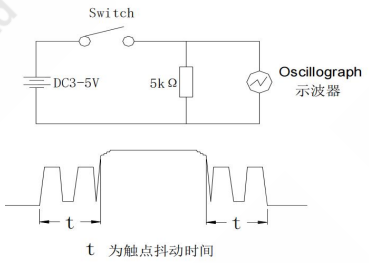

五、 机械特性（Mechanical Characteristics ）

No.	Item 项目	Criteria 标准	Test Method 实验方法
5.1	操作力 Operating Force	160±50gf	在操作元件末端沿操作方向均匀施加静载荷，使操作元件转换到动作位置。 Apply a tension meter on the midpoint of the actuator (or tip of the shaft) to supply a pressure vertically from its free position to operating position.
5.2	行程 Pre-Travels	0.20±0.1mm	从自由位置到动作位置的距离。 The distance vertically through, which the midpoint of the actuator (or tip of the shaft) trip move from its free position to operating position.
5.3	回弹力 Return Force	20gf Min.	开关垂直于操作方向放置，在开关驱动件顶端中心下降至全行程后，测量顶端向自由位置转换的力度。 The sample switch is installed such that the direction of switch operation is vertical and upon depressing the stem in its center to the whole travel distance, the force of the stem to return to its free position shall be measured.
5.4	强度 Push strength	无机械和电气损坏。 There shall be no sign of damage mechanically and electrically.	开关垂直于操作方向放置，从操作方向向驱动件施加 30N 的静负荷持续 1min。 Placing the switch such that the direction of switch operation is vertical, and then a static load of 30N shall be applied in the direction of stem operation for a period of 1 min.

5.5	手柄拔出强度 Stem Strength	20N Min.	开关垂直于操作方向放置，反方向实施最大操作力，并测量手柄的行程范围。 Placing the switch such that the direction of switch operation is vertical, and then the maximum force to withstand a pull applied opposite to the direction of stem operation shall be measured.
5.6	冲击 Mechanical Shock	实验后： 接触电阻：200mΩ Max. 绝缘电阻： 100MΩ Min. 无功能性不良。表面及结构无明显变形。 After test, Contact resistance:200mΩ Max. Insulation resistance:100MΩ Min. No functional defective occur No abnormalities shall be recognized in appearance and construction.	试件在下述参数条件下进行试验： 1. 安装方法：常规方法 2. 加速度：490m/ s² (50G) 3. 时间：11ms 4. 实验方向：图示方向 5. 冲击次数：每个方向 3 次（总共 18 次） Switch shall be measured after following test: 1. Mounting Method: Normal 2. Acceleration: 490m/s² (50G) 3. Duration: 11ms 4. Test Direction: 6 directions 5. Number of shocks: 3 times per direction (18 times in total) 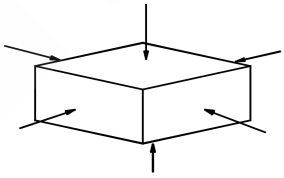
5.7	振动 Vibration Proof	实验后： 接触电阻：200mΩ Max. 绝缘电阻： 100MΩ Min. 无功能性不良。表面及结构无明显变形。 After test, Contact resistance:200mΩ Max. Insulationresistance:100MΩMin. No functional defective occur ,No abnormalities shall be recognized in appearance and construction.	开关采用常规的安装方法牢固地安装在试验设备上，并在下述参数条件下进行试验： 1. 振频=10-55Hz 2. 振幅 1.5mm 3. 振动变化速率：10-55-10Hz 大约 1 分钟 4. 变频方法：对数或线性型式 5. 振动方向：三个相互垂直的方向，其中一个方向应是促动元件运动的方向。 6. 时间：每个方向 2 小时（共 6 小时）。 Switch shall be secured to a testing machine by a normal mounting device and method. Switch shall be measured after following test: 1. Vibration frequency range：10~55 Hz 2. Total amplitude:1.5mm 3. Sweep ratio:10~55~10Hz Approx. 1 min 4. Method of changing the sweep vibration frequency: logarithmic or linear 5. Direction of vibration: Three perpendicular directions including actuating direction. 6. Duration: 2 hours (6 hours in total)

六、耐久性能（Durability Characteristics）

No.	项目 Item	标准 Criteria	实验方法 Test Method

6.1	动作寿命 Operation life	接触电阻：1Ω Max. Contact resistance：1Ω Max. 绝缘电阻：100MΩ Min. Insulation Resistance：100MΩ Min. 按力：初值的±30% Operating Force: Initial Value±30%	根据下面的测试要求进行测试： Measurement shall be made following the test set forth below: (1) DC 12V，50mA 带负载 DC 12V, 50 mA resistive load (1) 按动速率：2 次/秒 Rate of operation: 2 times/s (2) 按力：按力的 1.5 倍 Operating Force：1.5 times as much as Operating Force (3) 无故障寿命：100,000 次 Fault-free life: 100,000cycles

七、 耐候性能（Weather Proof Characteristics）

No.	项目 Item	标准 Criteria	实验方法 Test Method
7.1	低温 Cold Proof	实验后：接触电阻：200mΩ Max. 绝缘电阻： 100MΩ Min. 无功能性不良。开关外观及结构应无损坏。 After test, Contact resistance: 200mΩ Max. Insulation resistance:100MΩ Min. No functional defective occur.The switch shall be free from abnormalities in appearance and construction.	试件在-25±2℃的温控箱内保持 48 小时，然后在正常温度和湿度下恢复 1 小时，并在此后 1 小时内对试品进行测量，水滴应消失。 After testing at –25 ± 2°C for 48 hours, the switch shall be allowed to stand under normal temperature and humidity conditions for 1 hour, and measurement shall be made within 1 hour after that. Water drops shall be eliminated.
7.2	高温 Hot Proof		试件在 70±2℃的温控箱内保持 48 小时，然后在正常温度和湿度下恢复 1 小时，并在此后 1 小时内对试品进行测量。 After testing at 70 ± 2°C for 48 hours, the switch shall be allowed to stand under normal temperature and humidity conditions for 1 hour, and measurement shall be made within 1 hour after that.
7.3	恒定湿热 Moisture Resistance		试件在 40±2℃，90-95%RH 的温控箱内保持 96 小时，然后在正常温度和湿度下恢复 1 小时，并在此后 1 小时内对试品进行测量，水滴应消失。 After testing at 40± 2° C ,90~95% RH for 96 hours, the switch shall be allowed to stand under normal temperature and humidity conditions for 1 hour, and measurement shall be made within 1 hour after that. Water drops shall be eliminated.
7.4	温度转换 Temperature Cycling		试件按下述实验条件试验 5 次，然后在正常温度和湿度下恢复 1 小时，并在此后 1 小时内对试品进行测量，水滴应消失。 After 5 cycles of following conditions, the switch shall be allowed to stand under normal temperature and humidity conditions for 1 hour, and measurement shall be made within 1 hour after that. Water drops shall be eliminated. 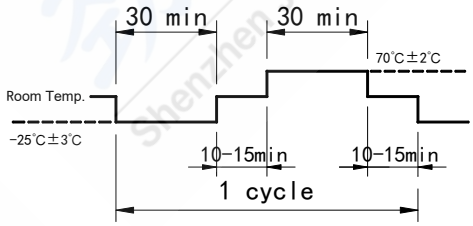

7.5	硫化试验 Sulfuration resistance		1. 浓度：3±1ppm.....Density：3±1ppm 2. 温度：40±2℃.....Temperature：40±2℃ 3. 相对湿度：90～95%.....Relative humidity:90～95% 4. 持续时间：72 小时.....Duration of test: 72h 5.试验后的放置条件：1 小时.....Standard conditions after test:1h
7.6	盐雾实验 Salt Mist	在金属件上没有腐蚀斑点。 No remarkable corrosion shall be recognized in metal part.	试件在下述实验后，盐沉积物用水冲掉，测量 1. 温度：35±2 2. 盐溶液浓度：5±1%（质量百分比） 3. 时间：24±1 小时 The switch shall be checked after following test，After test, salt deposit shall be removed by running water. 1. Temperature: 35± 2° C 2. Salt Solution: 5±1% (Solids by mass) 3. Duration: 24±1 hour

八、焊接条件（SOLDERING CONDITIONS）

No.	项目 Item	标准 Criteria	实验方法 Test Method
8.1	可焊性 Solderability	除边缘外涂层应均匀覆盖 90%以上 Except for the edge, the coating should cover a minimum 90%	在以下设定条件下进行测量: Measurements shall be made following the test set forth below: 1. 焊接温度:240±5℃.....Solder temperature : 240±5℃ 2. 浸入时间:3s±0.5s .....Immersion time: 3s±0.5s
8.2	手工焊接 Hand soldering	请按以下条件进行焊接： Please practice according to below conditions: 1. 焊锡温度：350℃ Max. .....Soldering temperature: ≤350℃ 2. 连续焊接时间：3s Max. .....Continuous soldering time: ≤3 s	
8.3	回流焊接 Conditions for reflow	对于 SMT 产品，请按以下条件进行焊接： For SMT products. Pls soldering by follow conditions： 注意：千万小心不要让开关表面温度超过 260℃。 Attention:.Should Control it below 260℃.	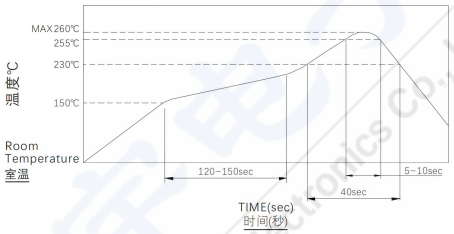

九、注意事项(Notes)：

1. 防止助焊剂从开关的顶端渗入
   Prevent flux penetration from the top of the switch
2. 开关浸焊后，注意不要用溶剂或类似品清洗开关。
   After switches were soldered,please be careful not to clean switches with solvent or other similar products.
3. 浸焊后，注意不要在顶部施加负荷。
   Right after switches were soldered;please be careful not to load to on the knobs of switches.
4. 注意不要施加超负荷的压力或晃动开关。
   Please be cautions not to give excessive static load or shock to switches.